B.E. Fifth Semester (Mechanical Engineering / Power Engineering) (C.B.S.)

Heat Transfer

P. Pages : 4 **NKT/KS/17/7341/7368**

Time : Three Hours Max. Marks : 80

Notes :
1. All questions carry marks as indicated.
2. Solve Question 1 OR Questions No. 2.
3. Solve Question 3 OR Questions No. 4.
4. Solve Question 5 OR Questions No. 6.
5. Solve Question 7 OR Questions No. 8.
6. Solve Question 9 OR Questions No. 10.
7. Solve Question 11 OR Questions No. 12.
8. Due credit will be given to neatness and adequate dimensions.
9. Assume suitable data whenever necessary.
10. Illustrate your answers whenever necessary with the help of neat sketches.
11. Use of non programmable calculator is permitted.
12. Use Heat Transfer data Book and steam table.

1. a) Define critical radius of insulation. States its effect on Heat transfer rate. **4**

b) Derive the expression for Heat lost per m^2 of the surface area for furnace wall, when the thermal conductivity varies with temperature according to relation **9**

$k=(a+bT^2)$ w/m°c, where T is in °C.

Also find the rate of Heat transfer through the wall is L=0.2m, T_1=300°C, T^2 =30°C and a=0.3, b=$5x10^{-6}$

OR

2. a) Derive the Heat conduction equation for Cylindrical /polar coordinate system. **8**

b) A steel pipe with 50 mm outer diameter is covered with a 6.4mm asbestos insulation (k = 0.116 w/mk) which follows a 25 mm fiber glass insulation (k=0.0485 w/mk). The pipe wall temp is 393 k and temperature of outer surface is 311 k. Calculate interface temp. of asbestos and fiber glass insulation. **5**

3. a) What are the significance of Biot Number and Fourier's number in Heat transfer analysis? **4**

b) obtain the temperature distribution equation and maximum temperature for the plane wall insulated at one end and other end exposed to the air when the wall generating Heat at uniform rate. **10**

A plane wall 90 mm thick (k=0.18 w/m°C) is insulated on one end, while other end is exposed to the environment at 80°C. The rate of heat generation within the wall is $1.3x10^5$w/m^3. If the convective Heat transfer coefficient is 520w/m^2 °C: Determine the maximum temperature to which wall will be subjected and Heat transfer rate.

OR

4. a) A Handle of the saucepan 30 cm long and 2 cm in diameter is partially immersed in the boiling water at 100°C. The average limit conductance over the handle surface is 7.35 w/m^2 °C when the kitchen air at 24°C. The cook is likely to grasp the last 10cm of the handle & hence, the temperature at this portion should not exceed 32°C. What would be the material conductivity of the handle? Handle may be treated as fin insulated at the tip. **7**

b) An Egg with mean diameter 40 mm is initially at 20°C is boiled for 4 minute in water pan and is found suitable for consumers test. How long the same egg to be boiled for same consumer test, if it is taken from the refrigerator At 5°C. **7**

Take following properties of egg.

K = 10 w/mk, ρ = 1200 kg/m^3

C_P = 2 kJ/kg k , h = 100 $\frac{w}{m^2 k}$

5. a) What is boundary layer thickness? Explain the concept of hydrodynamic Boundary layer. **4**

b) A tube bank uses aligned arrangement of tubes of dimeters 30mm with transverse and longitudinal pitch are 60mm and tubes is 1m length. There are 10 tubes in row in flow direction and have tubes per row. Air at 27°C flows over the tubes at a rate of 15 m/s. Tubes wall are maintained at 100°C. Determine the temperature of the air leaving the tube bank and rate of Heat transfer for the tube bank. **9**

OR

6. a) In a certain process castor oil at 30°C. Flows past a flat plate. The velocity of the oil is 0.08 m/s, the length of the plate is 5 m. The plate is heated uniformly and maintained at 90°C. calculate. **6**

a) Hydrodynamic boundary layer thickness at the trailing edge of plate.

b) Total drag force per unit width on the plate.

Take properties of castor oil

ρ = 956.8 kg/m^3 , k = 0.213 w/mk

α = 7.2 x 10^{-8} m^2/s, ν = 0.65 x 10^{-4} m^2/s

b) A hot air at 60°C leaving the furnace enters a 12 m long square c/s (20cm x 20cm) duct made up of sheet metal, at an average velocity of 4 m/s. The thermal resistance of the duct is negligible, and convective heat transfer coefficient of 10w/m^{2}k. The wall of the basement to be at 10°C. **7**

Determine

1) Temperature at which the hot air leaving the basement.

2) Rate of heat lost from the hot air to the basement.

7. a) A rectangular duct 30cmx20cm in cross section carries a cold air. The temperature of the outer surface of the duct is 5°C and surrounding is at 25°C. Find the heat gained by the duct when it is placed horizontally in the room, take length of the duct is 1 m. **7**

b) The dry and saturated steam at 42°C is condensed over a 60 cm square vertical plate maintained at 28°C. Calculate following. **7**

i) Film thickness and local heat transfer coefficient at 30 cm from the top.

ii) Average heat transfer coefficient and total heat transfer rate.

OR

8. a) Explain with suitable sketch Boiling Regimes. **4**

b) What is condensation? Explain the concept of film wise and dropwise condensation. **4**

c) The bottom of copper pan 300 mm in diameter is maintained at 120°C by an electric heater. calculate the power required to boil the water in the pan. What is the evaporation rate of water? also estimate critical heat flux. **6**

9. a) State following. **6**

i) Stefan's Boltzmann law. ii) Lambert cosine law.

iii) Kirchhoff's law. iv) Plank's law.

b) Calculate the shape factor f_{12} for the configuration shown in fig.01 and the net heat transfer Q_{12} it $T_1 = 427^oC$ and $T_2 = 227^oC$.consider surfaces are black. **7**

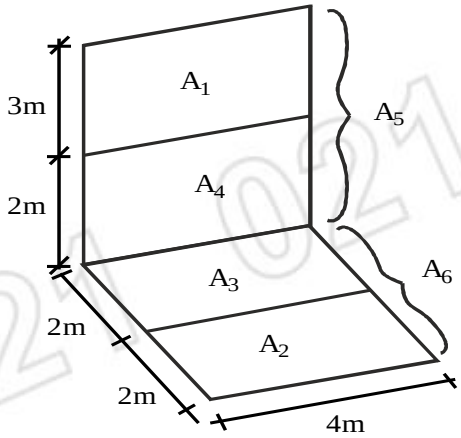

Fig. 1

OR

10. a) Define following. **6**

i) Radiosity ii) Emissive power

iii) Radiation shield iv) Shape factor

b) Two identical circular plates each with area $1m^2$ and emissivity 0.5 are arranged pacing each other in a large room. The emissive power of the plates are 30 kw/m^2 respectively. The temperature of the surrounding is 27°C. The surface of the plate facing each other only radiating energy. **7**

Find

1) Distance between the two plates.
2) Temperature of the plates

Assume shape factor between the plates as 0.6.

11. A cold water at 1495 kg/h enters the counter flow heat exchanger at 25°C to cool 605 kg/h of hot water enters at 70°C and leaving at 50°C. find the area of heat exchanger. The individual heat transfer coefficient on both slides are 1590 w/m^{2}k, use LMTD & NTU methods. Also find the exit temperature of cold and hot streams, it flow of hot and cold water is doubled. Assume that the individual heat transfer coefficients are proportional to 0.8th power of the flow rate. **13**

OR

12. A shell and tube type steam condenser is employed in a large steam power plant, has a heat exchange rate of 2200 MW. The condensed consisting of single pass shell and 32000 tubes, each exceeding two passes. **13**

The water at the rate of 3.2 x10^{4} kg/s passes through the tubes which are of thin walled and diameter of 30mm. The steam condensed on the outer surface of the tube. The heat transfer coefficient on the steam side is taken as 11500 w/m^{2}k.steam condensed at 50°C while water enters at 20°C in to the condenser, using LMTD correction factor method & NTU method. Calculate;

1) Outlet temperature of cooling water.
2) Length of tubes per pass.

****